HYDAC INTERNATIONAL

Electronic Pressure Transmitter
HDA 4800

Description:

The pressure transmitter series HDA 4800 has a very accurate and robust sensor cell with a thin-film strain gauge on a stainless steel membrane.

Outstanding technical specifications and robust construction make the HDA 4800 particularly suited to the field of test rig and diagnostic technology. It is also suitable for a broad range of industrial applications.

Since the accuracy of a pressure transmitter varies greatly with the temperature of the fluid, the instrument has excellent characteristics in this respect. The output signals 4 .. 20 mA, and 0 .. 10V are available as standard.

Special features:

- Accuracy ≤ ± 0.125 % FS B.F.S.L.
- Highly robust sensor cell
- Very small temperature error
- Excellent EMC characteristics
- Excellent long term stability

Technical data:

Input data	
Measuring ranges	150, 500, 750, 1000, 1500, 3000, 5000, 6000, 9000 psi
Overload pressures	290, 1160, 1740, 2900, 2900, 7250, 11600, 11600, 14500 psi
Burst pressures	1450, 2900, 4350, 7250, 7250, 14500, 29000, 29000, 29000 psi
Mechanical connection	9/16-18 UNF 2A (SAE 6 male)
Torque value	15lb-ft (20 Nm)
Parts in contact with medium	Mech. connection: Stainless steel Seal: FPM
Output data	
Output signal, permitted load resistance	4 .. 20 mA, 2 conductor $R_{L\,max.} = (U_B - 10\ V) / 20\ mA\ [k\Omega]$ 0 ..10 V, 3 conductor R = 2 kΩ
Accuracy to DIN 16086, Max. setting	≤ ± 0.125 % FS typ. ≤ ± 0.25 % FS max.
Accuracy at min. setting (B.F.S.L.)	≤ ± 0.06 % FS typ. ≤ ± 0.125 % FS max.
Temperature compensation Zero point	≤ ± 0.003 FS/°F typ. ≤ ± 0.006 FS/°F max.
Temperature compensation Over range	≤ ± 0.003 FS/°F typ. ≤ ± 0.006 FS/°F max.
Non-linearity at max. setting to DIN 16086	≤ ± 0.15 % FS max.
Hysteresis	≤ ± 0.1 % FS max.
Repeatability	≤ ± 0.05 % FS
Rise time	≤ 1 ms
Long-term drift	≤ ± 0.1 % FS typ. / year
Environmental conditions	
Compensated temperature range	-13..+185°F
Operating temperature range[1]	-40..+185°F/-13..+185°F
Storage temperature range	-40..+212°F
Fluid temperature range[1]	-40..+212°F/-13..+212°F
CE mark	EN 61000-6-1 / 2 / 3 / 4
c UL us mark[2]	Certificate No. E318391
Vibration resistance to DIN EN 60068-2-6 at 10 .. 500 Hz	≤ 20 g
Protection class to IEC 60529	IP 65 (for male EN175301-803 (DIN 43650) IP 67 (M12x1, when an IP 67 connector is used)
Other data	
Supply voltage for use acc. to UL spec.	10 .. 30 V DC 2-conductor 12 .. 30 V DC 3 conductor - limited energy - according to 9.3 UL 61010; Class 2; UL 1310/1585; LPS UL 60950
Residual ripple of supply voltage	≤ 5 %
Current consumption	≤ 15 mA
Life expectancy	> 10 million cycles 0 .. 100 % FS
Weight	~ 145 g

Note: Reverse polarity protection of the supply voltage, excess voltage, override and short circuit protection are provided.
FS (**F**ull **S**cale) = relative to complete measuring range
B.F.S.L.= **B**est **F**it **S**traight **L**ine
[1] 13 °F with FPM seal, -40 °F on request
[2] Environmental conditions according to 1.4.2 UL 61010-1; C22.2 No 61010-1

Knowledge is POWER – Motion Force Control is our Business
HYQUIP Limited New Brunswick Street Horwich Bolton Lancashire BL6 7JB UK

2

Model code:

HDA 4 8 7 X – X – XXXX – 000 (PSI)

Mechanical connection
7 = 9/16-18 UNF2A (SAE 6 male)

Electrical connection
5 = Male, 3 pole+ PE, EN175301-803 (DIN 43650) (connector supplied)
6 = Male M12x1, 4 pole (connector not supplied)

Signal
A = 4 .. 20 mA, 2 conductor
B = 0 .. 10 V, 3 conductor

Pressure ranges in psi
0150, 0500, 0750, 1000, 1500, 3000, 5000, 6000, 9000

Modification number
000 = Standard

Version
PSI = Pounds per square inch

Accessories:
Appropriate accessories, such as electrical connectors, can be found in the Accessories catalog.

Pin connections:

EN175301-803 (DIN 43650)

Pin	HDA 4875-A	HDA 4875-B
1	Signal+	$+U_B$
2	Signal-	0 V
3	n.c.	Signal
⊥	Housing	Housing

M12x1

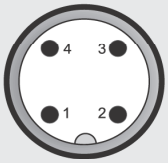

Pin	HDA 4876-A	HDA 4876-B
1	Signal+	$+U_B$
2	n.c	n.c
3	Signal-	0 V
4	n.c	Signal

Dimensions:

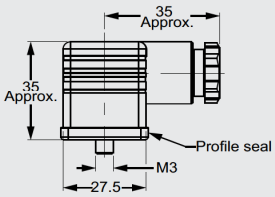

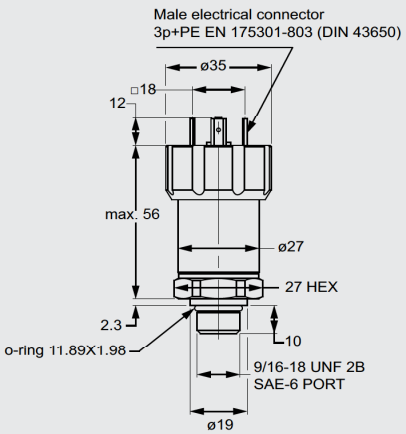

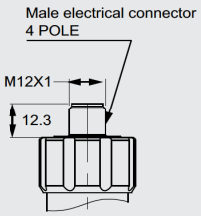

E 18.380.1/11.13

Knowledge is POWER – Motion Force Control is our Business
HYQUIP Limited New Brunswick Street Horwich Bolton Lancashire BL6 7JB UK